USER MANUAL

7.Troubleshoot using the status LED

The multi colour status LED provides information on the condition of the controller and the lamp. Consult table 1 and 2 to interpret the status LED. LED signals are represented by colored dots.
- All operating modes include GREEN;
- All warning codes include RED;
- All history codes (except the ignition code) include ORANGE;
- WARNINGS and history codes overrule operating mode display.

7.1. Status indications

Status LED message	Status fixture	Description	Action/Solution
●●●●●●●●●●●●	No power / off	The fixture is not connected to the mains or the power is off	Check power
●●●●●●●●●●●●	Ballast stand-by (on EXT)	Fixture is connected to the mains and to a controller. Output of ballast is off	
●●●●●●●●●●●●	Ballast on (on EXT)	Fixture is connected to the mains and to a controller. Output of ballast is on	
●●●●●● ●●●●●	Ballast on (Manual dim)	Fixture is connected to the mains and set to manual output	
●●●●●●●●●●●●	Fixture is igniting the lamp	Fixture is trying to restart the lamp	No action required. When lamp doesn't start: Lamp too hot, defect or not properly connected (remote). Disconnect, check power cord and connections

Table 1

7.2. Error or warning indications

Status LED message	Status fixture	Description	Action/Solution
●●●●●●●●●●●●	Too low voltage	Input voltage is too low	Check mains voltage
●●●●●●●●●●●●	Too low voltage occured in past		See above, reset
●●●●●●●●●●●●	Too high voltage	Input voltage is too high	Check input voltage, check wiring and connection, check neutral in 3 phase systems
●●●●●●●●●●●●	Too high voltage occured in past		See above, reset
●●●●●●●●●●●●	Too high temperature	Electronics temperature is too high (max. 115 ° Celsius/ 239 ° Fahrenheit)	Disconnect from mains. Check installation, clean ballast, check environment temperature (max 35 ° Celsius/ 95 ° Fahrenheit). Make sure fixture is not heated by HPS lamp light. Wait untill the lamp is cooled down, then reconnect to mains
●●●●●●●●●●●●	Too high temperature occured in past		See above, reset
●●●●●●●●●●●●	No signal from controller (on EXT)	Fixture is connected to the mains and set to EXT but there is no signal on the control input.	If a controller is connected, search for loose connections, defect contacts or short-circuits.

Table 2

● BLACK ● RED ● YELLOW ● GREEN

8.Warning

Power surge,power outage,outage overloading may stress or damage the lamp.As a safety feature,this Soft-Start technology also reduces ballast damage caused by a bulb failure.In case of an unexpected shut-off,please disconnect from the power supply,remove the faulty lamp,check for wiring problems,then plug-in the ballast power cord.

E-SERIES 1000W DOUBLE ENDED COMPLETE GROW LIGHT SYSTEM 120-240V USER MANUAL

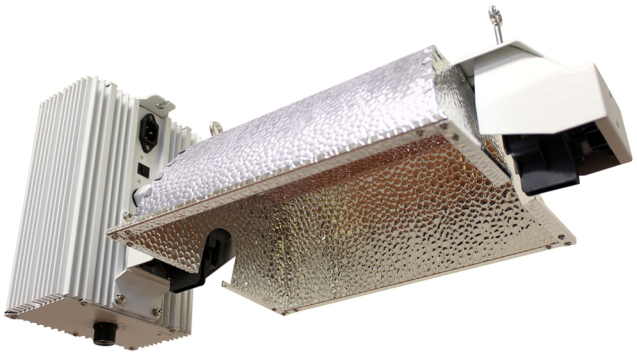

Product Advantage

- Generator ready
- Runs MH or HPS lamps
- High efficiency electronic ballast
- No acoustic resonance
- Lower harmonic distortion
- High output and improved spectrum
- Driver efficiency at full power: 95-96%
- Dimmable and Multi-Wattage with boost
- Completely sealed against dust and moisture
- Completely silent, light-weight and high energy-efficient.

1.Introduction

Thank you for purchasing Electronic Ballast. Please review the following instructions to ensure you receive the best performance. Each ballast uses a high temperature, resin-sealed component board for completely silent operation without a fan.
Each unit is burned-in at the factory for approximately twelve hours to ensure maximum reliability.

Ballasts use a micro-processor similar to your home computer. This micro-processor allows the Ballast to run halide or sodium lamps. It is programmed for a "soft-start" and does not require an initial surge of power to light the lamp. This increases the lamp life and allows the end user to start multiple ballasts at the same time without tripping breakers. To ensure safe operation, this Programmed for a "soft-start" and does not require an initialsurge of power to light or missing lamp.In case of auto-shutoff, please disconnect from the power supply,remove the faulty lamp or check for wiring problems,then restart your ballast.

2.Contents

A. E -series product
   1. Electronic ballast
   2. Lamp sockets
   3. Mounting points
   4. PR bracket
   5. Reflector
   6. Lever to unlatch reflector
B. Threeway control cable splitter (3xRJ11)
C. Power cord with either NEMA 5-15 or NEMA 6-15 plug
D. 2x Interconnect/ drop cable (RJ11/RJ11) Cable length: 1.5 m / 5 ft

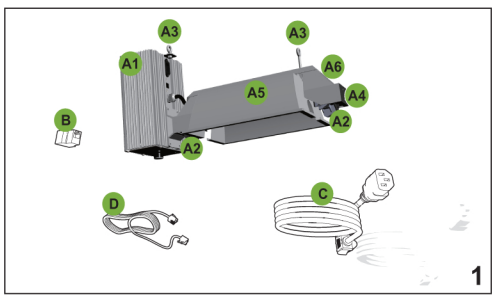


NEMA 5-15


NEMA 6-15

3.Controls, connections and indications

A. Female RJ11 port for controller input
B. Power output selector knob
C. Status LED
D. IEC connector for power cord

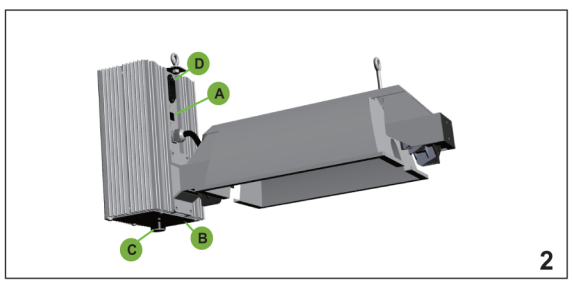

4.Installing the fixture

1.Switch off mains power.
2.Install the lamp in the fixture (see paragraph 6).
3.Hang the lamp by its two mounting points (3). The two mounting points are spaced 365mm /14.37 inch.

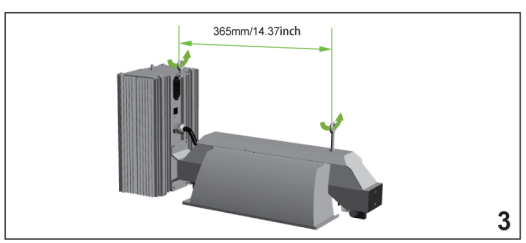

USER MANUAL

5.Product information

5.1. Technical specifications

Version	1000W 120V/240V		1000W 240V	600W 120V/240V		600W 240V
Product weight	6.0kg/13.22lb					
Dimensions (L*W*H)	579mm x 236mm x 271mm / 22.79″ x 9.29″ x 10.67″					
Temperature case	75 ° Celsius / 167 ° Fahrenheit					
Temperature ambient	0 ~ 35 ° Celsius / 32 ~ 95 ° Fahrenheit					
Input voltage +/-10%	120 V	240 V	240 V	120 V	240 V	240 V
Input current at 100%	9.30 A	4.60 A	4.6 0A	5.60 A	2.80A	2.80 A
Input current at 110/115%	10.42 A	5.06 A	5.06 A	6.00A	2.96A	2.96 A
Input power at 100%	1085 W	1055 W	1055 W	655 W	645 W	645 W
Input power at 110/115%	1250W	1215 W	1215 W	720 W	710 W	710 W
Power factor	>0.99					
Total Harmonic Distortion	< 10%					
Frequency	50 - 60 Hz					
Power inlet	IEC C14					
Power output settings (plus EXT)	600/750/825/1000/1150 Watt/EXT			300/400/500/600/660 Watt/EXT		
External dim:	AI controller					
External control signal:	RJ11 connector build in (6P4C)					
Ignition voltage:	5 kV					
Inrush current:	⩽ 50 Amps		⩽ 37.5 Amps	⩽ 50 Amps		⩽ 37.5 Amps
Plug type:	Nema 5-15		Nema 5-15	Nema 5-15		Nema 5-15

5.2. Environment

The product is meant for use in climate rooms. The product may be used in damp environments. The product may not be used in wet environments or outdoors. The 600 W and 1000 W lamps function optimal when the ambient temperature is between 20 ~ 30 ° Celsius / 68 ~ 86 ° Fahrenheit.

6.Placement and replacement of the lamp

1.Switch off mains power.
2.Hold the lamp with a fabric glove to prevent it from falling. Use a protective glove if the lamp is damaged.
3.Open the lamp holders by sliding them outwards (4).
4.Carefully take the lamp out of the fixture (5).
5.Install the new lamp with the getter near the ballast (6), with the glass vacuum seal pointed downwards or sideways .
6.Use a fabric glove to carefully press the lamp in the fitting until the metal springs hold the lamp.
7.Close the lamp holders by sliding them inwards (7).
8.Switch on mains power.

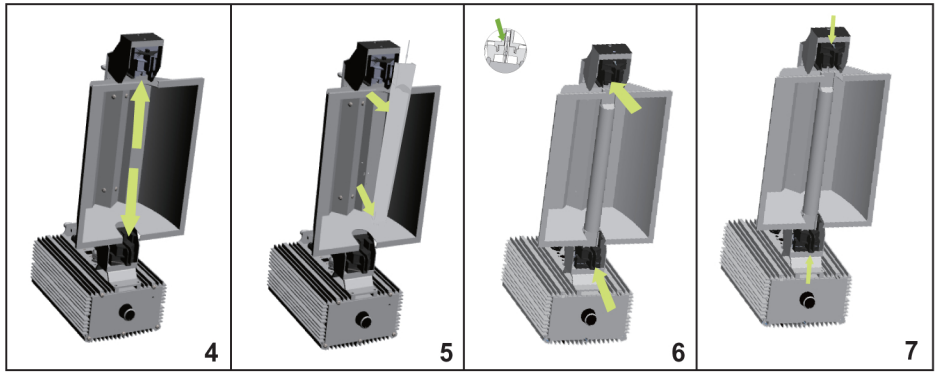

IMPORTANT PRODUCT INFORMATION

READ IMMEDIATELY

SAFETY FIRST!

Failure to observe the following safety warnings may result in serious injury or death. Use all products only as directed. Failure to observe these safety warnings will result in a waiver of any and all liability on the part of its manufacturer, and resellers, and will void all warranties to the extent permitted by law.

WARNINGS AND INSTRUCTIONS

FOR USE:

- Disconnect power before re-lamping.
- When re-lamping, make sure lamp has time to cool before touching.
- Make sure power cord is connected properly.
- **DO NOT** hang ballast by power cord or lamp cord.
- **DO NOT** make contact with the interior of the socket while the power is on.
- **DO NOT** plug or unplug a lamp cord while the ballast is turned on.
- **ALWAYS** unplug the ballast from the power source before connecting or disconnecting any lighting device to ballast, moving ballast, or otherwise touching or handling ballast or its components.
- **DO NOT** use with generators. Warranty will be voided.
- **NEVER** stand beneath the ballast.
- **NEVER** put hands or any other objects in the interior of the ballast.
- **DO NOT** operate this or any lighting system in wet areas.
- **NEVER** get the ballast wet or allow it to come into contact with water or any other liquids.
- **NEVER** drop, shake or jostle the ballast.
- **NEVER** attempt to insulate or otherwise cover the ballast, as it releases a great deal of heat and may cause a fire or other damage. Ballasts should always have plenty of room to breathe and good ventilation around them.
- **DO NOT** plug this system into a supply voltage other than what is instructed on your fixture.
- **DO NOT** attempt open or rewire the components of the light system. It will void the warranty and may cause serious injury or death.
- **NEVER** attempt to rewire or alter any internal or external mechanisms or components on the ballast. This includes trying to cut and/or rewire the cords.
- If any part of the lamp is damaged, replace lamp immediately.
- Disconnect the unit from a power source before replacing lamps or any other parts.
- When replacing lamps, make sure the lamp has had time to cool before touching.
- Make sure power cord and lamp cord are connected securely to the unit.
- These products operate at very high temperatures. Keep away from children.
- Glass is required for reflectors using metal halide (MH) lamps for UL listing to apply. Glass is not required for high pressure sodium (HPS) lamps to be UL listed.
- Always use a three prong timer rated for 15 amps or more with light systems.
- Do not operate lamps that are a different wattage than the ballast specifies.
- Read all instructions completely before attempting to power on unit. Failure to follow the warnings and instructions for use may result in serious injury or death, for which the manufacturer and resellers expressly disclaim any and all liability.

2 Year Limited Warranty Service

If the product will not work after you have read the troubleshooting guide and practiced the troubleshooting options, you are advised to return the light system to the retailer you purchased it from. The dealer will be able to examine the light and test its components. If they are not able to repair the light, they will return it to us for examination and repair/replacement. Do not attempt to repair any product on your own, as serious injury or death may result. If the retailer is not able to help you and the light is still under manufacturer's warranty, you may contact us for technical support. In some cases, you will be issued an RMA# (return merchandise authorization number) to return the unit for factory repair. Complete the warranty form below and return the light with all original packaging, your receipt of purchase, and a valid RMA# to the address below. Please pack and ship the light in its original packaging. If it is damaged in shipment we cannot be responsible and the warranty may be voided. Once we receive RMA package, it will be repaired or replaced and shipped back to you. Please note if an additional warranty was purchased and include the extended warranty sales receipt with your return.

RETURN FORM

Include the following if returning:

- ✓ Proof of purchase
- ✓ This completed form
- ✓ RMA# on the outside of the box
- ✓ Extended warranty receipt

Return Merchandise Authorization Number (Required): _____

Contact Name: _____

Address: _____

_____

Phone #: _____

Email Address: _____

Please give a brief description of your technical issue: _____

_____

_____

_____

UPDATE ADDRESS:
RMA Dept.
17128 Colima Road Suite 510
Hacienda Heights, CA 91745
714-516-8176